ACU-RITE®

Instruction Manual

Room Monitor

model 00276RM

CONTENTS

Unpacking Instructions 2
Package Contents 2
Product Registration 2
Features & Benefits..... 3
Setup 4
Placement Guidelines 5
Using the Room Monitor..... 6
Add-on Wired Sensors 7
Troubleshooting 8
Specifications..... 8
FCC Information 9
Customer Support 10
Warranty.....10

Questions? Contact Customer Support at (877) 221-1252 or visit www.**AcuRite**.com.

SAVE THIS MANUAL FOR FUTURE REFERENCE.

ACU RITE

Congratulations on your new AcuRite product. To ensure the best possible product performance, please read this manual in its entirety and retain it for future reference.

Unpacking Instructions

Remove the protective film that is applied to the LCD screen prior to using this product. Locate the tab and peel off to remove.

Package Contents

1. Room Monitor
2. Mounting hardware
3. Instruction manual

IMPORTANT PRODUCT MUST BE REGISTERED TO RECEIVE WARRANTY SERVICE

PRODUCT REGISTRATION
Register online
to receive 1 year
warranty protection
www.**AcuRite**.com

Features & Benefits

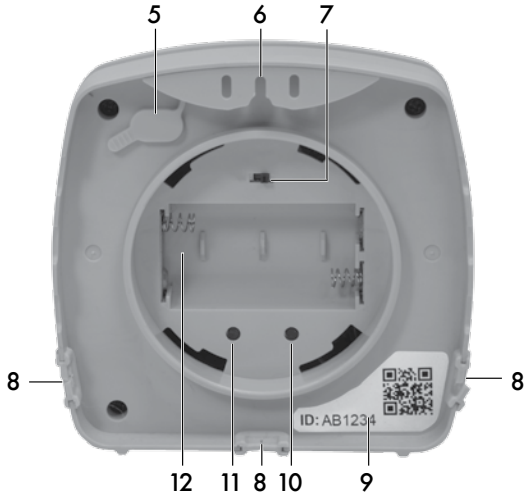

FRONT

1. **Wireless Signal Indicator**
   Flashes when data is being wirelessly transmitted.
2. **Low Battery Indicator**
3. **Current Indoor Humidity**
   Displayed when no wired sensor is attached (see page 6).
4. **Current Indoor Temperature**
   Displayed when no wired sensor is attached (see page 6).

BACK

5. **Sensor Input**
   Plug-in for additional sensors (optional; sold separately).
6. **Integrated Keyhole**
   For easy wall mounting.
7. **Alarm "ON/OFF" Switch**
   For water detector (optional; sold separately).
8. **Wired Sensor Retention Slot**
   Simplifies cord management when using add-on wired sensors (sold separately).
9. **Monitor ID**
   Alphanumeric ID used to identify the Monitor during system configuration.
10. **"°C/°F" Button**
    Select between degrees Celsius (°C) or Fahrenheit (°F) temperature units.
11. **Reset Button**
    Resets display and sensor transmission.
12. **Battery Compartment**
13. **Battery Compartment Cover**
14. **Mounting Hardware**
    Includes drywall anchor and screw.

Item	Qty	Diameter	Length
Screw	1	#6	3/4"
Anchor	1	#6	3/4"

Room Monitor Setup

1 Install or Replace Batteries

Batteries MUST be installed for this product to operate. AcuRite recommends high quality alkaline batteries for the best product performance. Heavy duty or rechargeable batteries are not recommended.

1. Twist off the battery compartment cover.
2. Insert 2 x AA batteries into the battery compartment, as shown. Follow the polarity (+/-) diagram in the battery compartment.
3. Replace the battery cover.

2 Write Down the Monitor's ID

After batteries are installed, a unique 6-digit alphanumeric ID appears on the display momentarily. It can also be found printed on the back of the Room Monitor. This unique ID may be referenced for connectivity functions.

ID:_____

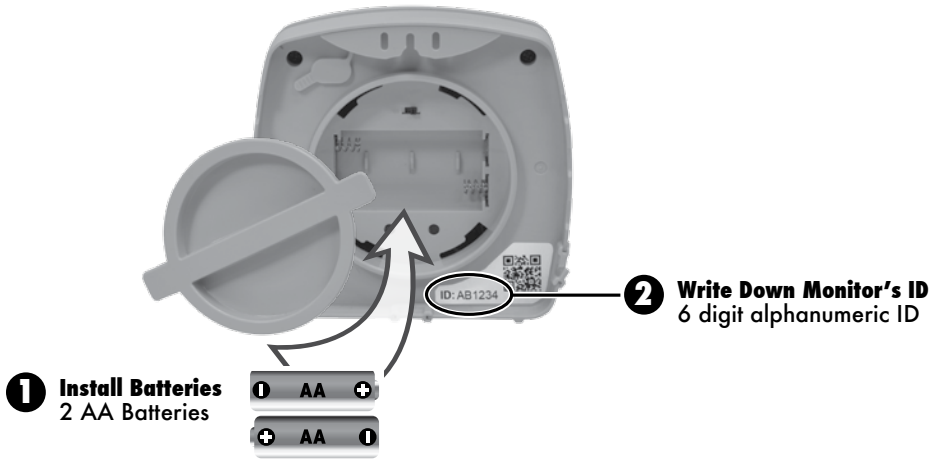

PLEASE DISPOSE OF OLD OR DEFECTIVE BATTERIES IN AN ENVIRONMENTALLY SAFE WAY AND IN ACCORDANCE WITH YOUR LOCAL LAWS AND REGULATIONS.

BATTERY SAFETY: Clean the battery contacts and also those of the device prior to battery installation. Remove batteries from equipment which is not to be used for an extended period of time. Follow the polarity (+/-) diagram in the battery compartment. Promptly remove dead batteries from the device. Dispose of used batteries properly. Only batteries of the same or equivalent type as recommended are to be used. DO NOT incinerate used batteries. DO NOT dispose of batteries in fire, as batteries may explode or leak. DO NOT mix old and new batteries or types of batteries (alkaline/standard). DO NOT use rechargeable batteries. DO NOT recharge non-rechargeable batteries. DO NOT short-circuit the supply terminals.

Placement for Maximum Accuracy

AcuRite products are sensitive to surrounding environmental conditions. Proper placement of the Room Monitor is critical to the accuracy and performance of the product.

Room Monitor Placement

The Monitor is designed for indoor use. Place the Monitor in a dry area free of dirt and dust. Monitor stands upright for tabletop use or is wall-mountable.

Important Placement Guidelines

- Monitor must be within 330 feet (100 meters) of a companion unit (optional; sold separately).

MAXIMIZE WIRELESS RANGE

Place units away from large metallic items, thick walls, metal surfaces, or other objects that may limit wireless communication.

PREVENT WIRELESS INTERFERENCE

Place both units at least 3 feet (90 cm) away from electronic devices (TV, computer, microwave, radio, etc.).

LOCATE AWAY FROM HEAT SOURCES

To ensure accurate temperature measurement, place Monitor out of direct sunlight and away from any heat sources.

LOCATE AWAY FROM HUMIDITY SOURCES

To ensure accurate humidity measurement, locate Monitor away from humidity sources. Avoid installing the Monitor near indoor pools, spas, or other bodies of water. Water sources may impact humidity accuracy.

Using the Room Monitor

The Room Monitor features built-in temperature and humidity sensors, to view current conditions in the location where the Monitor is placed.

Expand the System

The Room Monitor can be expanded to track additional conditions using compatible wired sensors (optional; sold separately) that simply plug into the Monitor. Wired sensors feature an extra-long cord, perfect for installing the sensors in hard-to-reach places.

When using a wired sensor with the Monitor, the Monitor's temperature and humidity readings move to the top of the display. The display will automatically toggle between the Monitor's temperature and humidity data, while the wired sensor's readings appear in the middle of the display (pictured below).

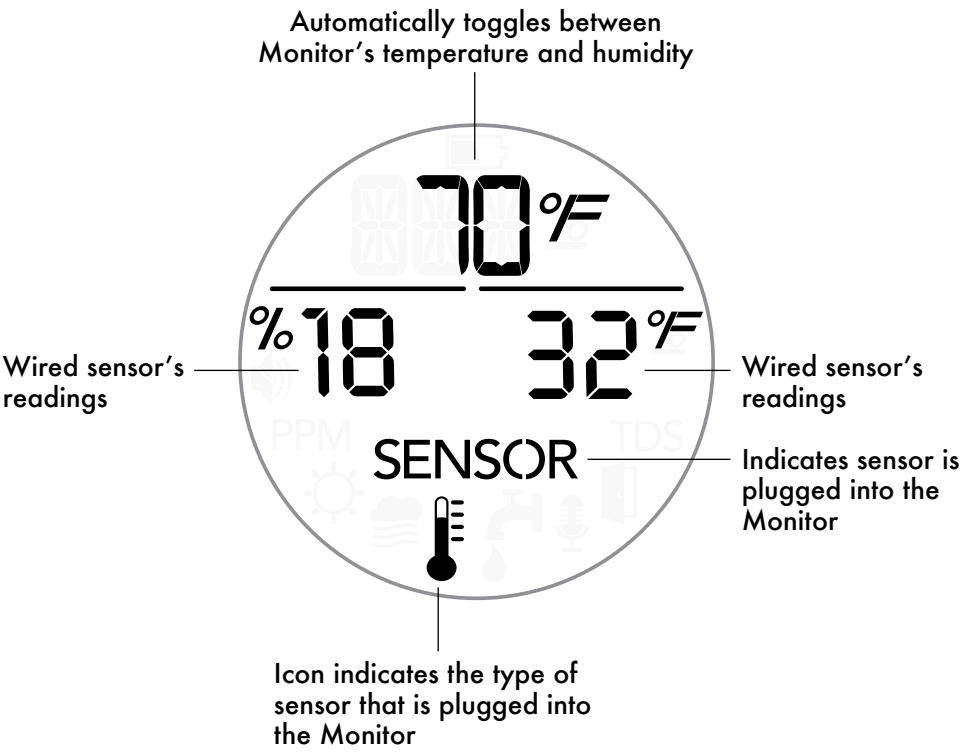

Compatible digital displays, wired sensors and companion units are available at: **www.AcuRite.com**

Add-on Wired Sensors

Add-On Sensor	Room Monitor Display with wired sensor	Perfect for:
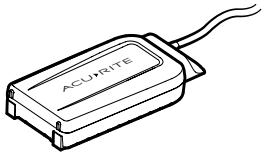 **Water Detector** with audible alert Model 06010RM	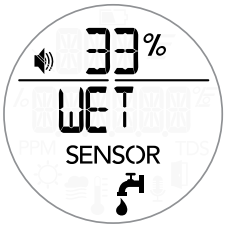	• Basement flooding • Roof leaks • Leaky appliances • Sump pump failure • Tracking high or low water level
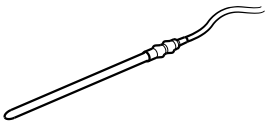 **Liquid & Soil Temperature Sensor** Model 06011RM	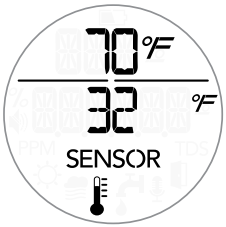	• Indoor pool, spa, pond or fountain temperature • Preventing frozen pipes • Seeding, potting and gardening
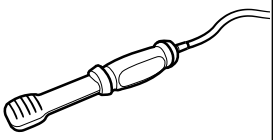 **Spot Check Temperature & Humidity Sensor** Model 06012RM	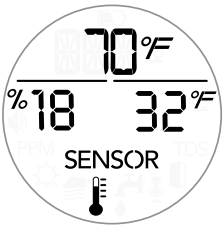	• Monitoring conditions in hard to reach places (attic, basement, etc.) • Pet areas • Evaluating HVAC coverage in your home • Monitoring conditions in nursery or child's room

Troubleshooting

Problem	Possible Solution
Inaccurate temperature or humidity	• Verify the Monitor is placed away from any heat sources or vents (see page 5). • Verify the Monitor is positioned away from moisture sources (see page 5).
Display screen not working	• Check that the batteries are installed correctly. Batteries may need to be replaced. • Reset display by pressing the RESET button, located on the back of the Monitor.
Display screen shows ERROR 1	• Check the cord on the wired sensor (sold separately) and the connection tip for excessive heat, excessive cold or damage. Wired sensor may need to be replaced.
Display screen shows ERROR 2	• Data readings for the wired sensor (sold separately) may be out of range. Check the location of the Monitor and wired sensor. Verify that the conditions being monitored are within the measurement range for the wired sensor.

If your AcuRite product does not operate properly after trying the troubleshooting steps, visit www.AcuRite.com or call (877) 221-1252 for assistance.

Care & Maintenance

Clean with a soft, damp cloth. Do not use caustic cleaners or abrasives.

Specifications

TEMPERATURE RANGE	-4°F to 158°F; -20°C to 70°C
HUMIDITY RANGE	1% to 99% RH
WIRELESS RANGE	330ft / 100m depending on home construction materials
OPERATING FREQUENCY	433 MHz
POWER	2 x AA alkaline batteries

FCC Information

This device complies with part 15 of FCC rules. Operation is subject to the following two conditions:
1- This device may NOT cause harmful interference, and
2- This device must accept any interference received, including interference that may cause undesired operation.
This equipment has been tested and found to comply with the limits for a Class B digital device, pursuant to Part 15 of the FCC rules. These limits are designed to provide reasonable protection against harmful interference in a residential installation. This equipment generates, uses and can radiate radio frequency energy and, if not installed and used in accordance with the instructions, may cause harmful interference to radio communications. However, there is no guarantee that interference will not occur in a particular installation. If this equipment does cause harmful interference to radio or television reception, which can be determined by turning the equipment off and on, the user is encouraged to try to correct the interference by one or more of the following measures:

- Reorient or relocate the receiving antenna.
- Increase the separation between the equipment and the receiver.
- Connect the equipment into an outlet on a circuit different from that to which the receiver is connected.
- Consult the dealer or an experienced radio/TV technician for help.

NOTE: The manufacturer is not responsible for any radio or TV interference caused by unauthorized modifications to this equipment. Such modifications could void the user authority to operate the equipment.
This device complies with Industry Canada license-exempt RSS standard(s).
Operation is subject to the following two conditions:
(1) This device may not cause interference, and
(2) This device must accept any interference received, including interference that may cause undesired operation of the device.

Customer Support

AcuRite customer support is committed to providing you with best-in-class service. **For assistance**, please have the model number of this product available and contact us in any of the following ways:

(877) 221-1252 info@chaney-inst.com

24/7 support at www.**AcuRite**.com

- Installation Videos
- Instruction Manuals
- Replacement Parts
- Register your Product
- Support User Forum
- Submit Feedback & Ideas

IMPORTANT PRODUCT MUST BE REGISTERED TO RECEIVE WARRANTY SERVICE

PRODUCT REGISTRATION
Register online
to receive 1 year
warranty protection
www.**AcuRite**.com

Limited One Year Warranty

At AcuRite, we proudly uphold our commitment to quality technology. Chaney Instrument Co. warrants that all products it manufactures to be of good material and workmanship, and to be free of defects when properly installed and operated for a period of one year from the date of purchase.

We recommend that you visit us at www.AcuRite.com for the fastest way to register your product. However, product registration does not eliminate the need to retain your original proof of purchase in order to obtain warranty benefits.

Chaney Instrument Co. warrants that all products it manufactures to be of good material and workmanship, and to be free of defects when properly installed and operated for a period of one year from the date of purchase. Remedy for breach of this warranty is limited to repair or replacement of the defective item(s). Any product which, under normal use and service, is proven to breach the warranty contained herein within ONE YEAR from date of sale will, upon examination by Chaney, and at its sole option, be repaired or replaced by Chaney. Transportation costs and charges for returned goods shall be paid for by the purchaser. Chaney hereby disclaims all responsibility for such transportation costs and charges. This warranty will not be breached, and Chaney will give no credit for products it manufactures which have received normal wear and tear, been damaged (including by acts of nature), tampered, abused, improperly installed, damaged in shipping, or repaired or altered by others than authorized representatives of Chaney.

The above-described warranty is expressly in lieu of all other warranties, express or implied, and all other warranties are hereby expressly disclaimed, including without limitation the implied warranty of merchantability and the implied warranty of fitness for a particular purpose. Chaney expressly disclaims all liability for special, consequential or incidental damages, whether arising in tort or by contract from any breach of this warranty. Some states do not allow the exclusion or limitation of incidental or consequential damages, so the above limitation or exclusion may not apply to you. Chaney further disclaims all liability from personal injury relating to its products to the extent permitted by law. By acceptance of any of Chaney's products, the purchaser assumes all liability for the consequences arising from their use or misuse. No person, firm or corporation is authorized to assume for Chaney any other liability in connection with the sale of its products. Furthermore, no person, firm or corporation is authorized to modify or waive the terms of this paragraph, and the preceding paragraph, unless done in writing and signed by a duly authorized agent of Chaney. This warranty gives you specific legal rights, and you may also have other rights which vary from state to state.

For in-warranty claims: Chaney Instrument Co.
965 Wells St., Lake Geneva, WI 53147

Weather Stations

Temperature & Humidity

Weather Alert Radio

Kitchen Thermometers & Timers

Clocks

It's More than Accurate, it's ACU▸RITE®

AcuRite offers an extensive assortment of precision instruments, designed to provide you with information you can depend on to Plan your day with confidence™.

www.AcuRite.com

Printed in China
00276 INST 052215

©Chaney Instrument Co. All rights reserved. AcuRite is a registered trademark of the Chaney Instrument Co., Lake Geneva, WI 53147. All other trademarks and copyrights are the property of their respective owners. AcuRite uses patented technology. Visit www.AcuRite.com/patents for details.